Williams Controls

Electronic Suspended Pedal

WM-542

The Electronic Suspended Pedal WM-542 is designed for commercial and industrial vehicle applications.

The unit is equipped with a Hall-effect, non-contact sensor that can be programmed for analog output and/or integrated switches. The electronics are IP67 sealed and highly EMI resistant (SAE J1113). In addition, the unit can be customized with contact or PWM output sensors.

The Electronic Suspended Pedal WM-542 is available with a nominal 20 degree angular rotation. The Throttle Control has a glass filled nylon body and lever arm. The mounting bracket is made out of coated steel.

Both lever arm and bracket can be customized for customer requirements.

SPECIFICATIONS

PRODUCT LIFE	Full Travel Cycles	3,000,000
ELECTRONICS	Seal Integrity EMI	Electronics IP67 sealed (IEC 60529) SAE J1113 Compliant
ELECTRICAL	Operating Voltage Output Signal	5V and 12V-24V Dual APS, Dual PWM, APS, PWM, APS/IVS
PEDAL ANGLE	Degrees	20° nominal
MECHANICAL	Static Load Vibration	667N 3 hour, 3-axis, random broadband up to 4g
ENVIRONMENTAL	Operating Temp Range Storage Temp Range Humidity Sand/Dust	-40°C to 85°C -40°C to 85°C 95% RH for 120 hours, 27°C to 75°C Tested to SAE J1455
MATERIALS	Main Body Mounting Plate Treadle Cover	Composite Plastic Coated Steel Composite Plastic

MECHANICAL DIMENSIONS (mm)

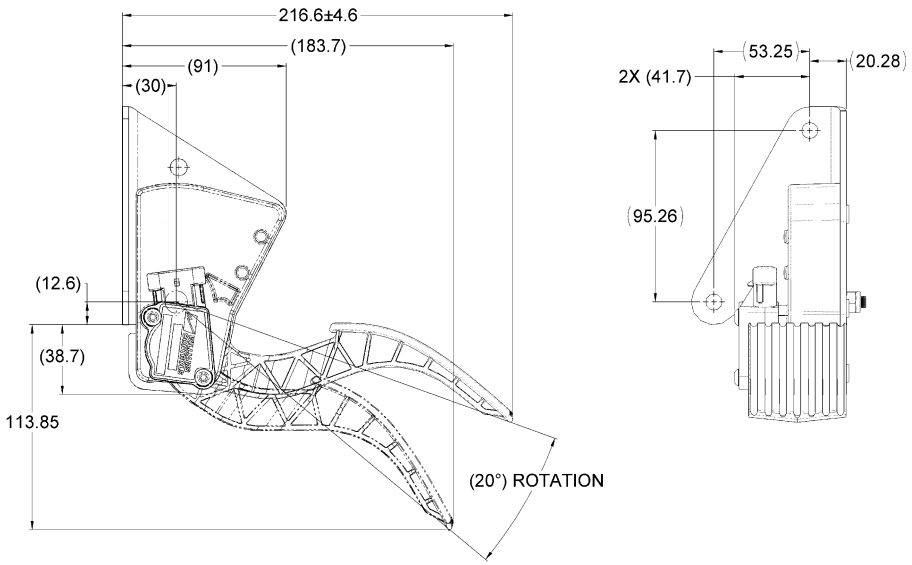

TYPICAL OUTPUT CHARACTERISTICS (other outputs are available)

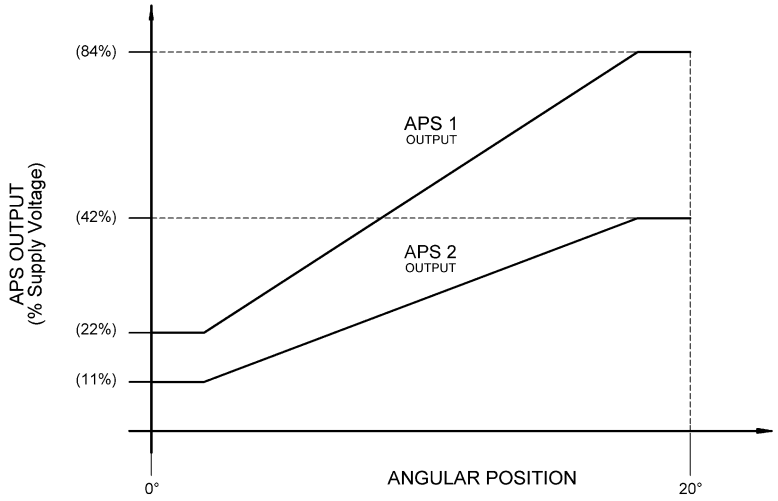

WM542-11/14

CURTISS-WRIGHT

USA Portland
Oregon
T: +1.509.684.8600
F: +1.503.684.3879
cwig.us@curtisswright.com
www.cw-industrialgroup.com

Europe Christchurch
United Kingdom
T: +44.1425.271444
F: +44.1425.272655
cwig.uk@curtisswright.com
www.cw-industrialgroup.com

Asia Shanghai
China
T: +86.213.3310670
cwig.cn@curtisswright.com
www.cw-industrialgroup.com

WCS-135189

Williams Customer Specification

Features:

- 20° Angular Rotation
- Non-Contact Hall Effect Sensor
- Dual APS output
- Electronics IP66 Sealed
- +5V Operation
- -40°C to + 85°C Operation
- AMP 6-Pin Connector

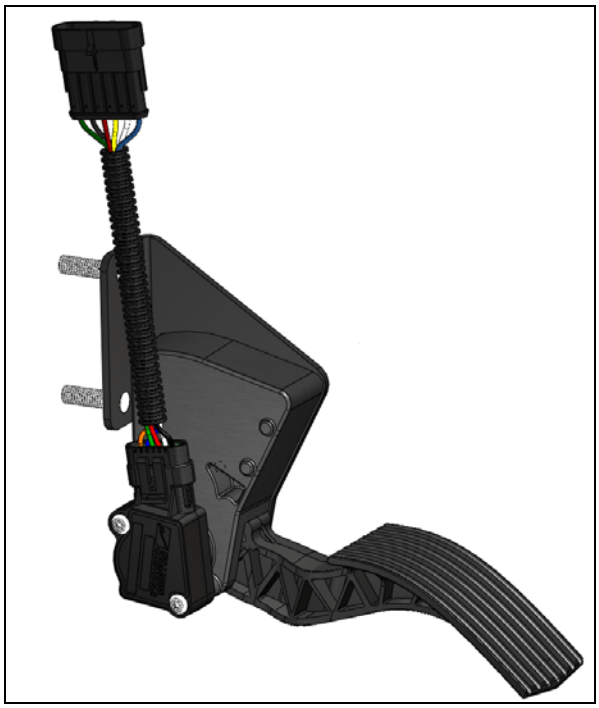

Applications:

- Throttle Control Pedal
  - Commonly used with Bosch 6.1 ECU
- Compliant with US Standards FMVSS-124 and FMVSS-302

Description:

135189 is a suspended, electronic pedal assembly that provides a throttle control signal in response to a driver's input. The pedal employs a sensor that outputs two electrical signals proportional to the angular displacement of the pedal.

Connector Pin Configuration:

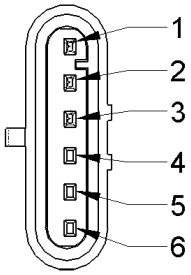

PIN	FUNCTION
1	APS 2 GROUND
2	APS 2 SIGNAL
3	VCC 2 (+5V)
4	VCC 1 (+5V)
5	APS 1 GROUND
6	APS 1 SIGNAL

Mating connector:
Tyco Electronics/ AMP Part - 282108-1

Absolute Maximum Electrical/Mechanical Ratings

Supply Voltage	+5V ± 0.5V
Supply Current (APS)	±10 mA
Short circuit duration to ground	Indefinite
Operating Temperature	-40°C to +85°C
Storage Temperature	-40°C to +85°C
Static Load Limit	667 N measured 152mm from pivot

Operation of this device beyond absolute maximum ratings may result in permanent damage.

Environmental Validation (Refer to Williams Spec WDS-010)

- **Thermal Cycle / Stress**
  SAE J1455 -40°C to +85°C
- **Thermal Shock**
  -40°C to +85°C
- **Humidity**
  120 hour exposure at 95% humidity from +27°C to +75°C
- **Mechanical Vibration**
  Random broadband 5-500 Hz, 4.0 G's
- **Salt Spray Exposure**
  ASTM B-117 96 hr exposure
- **Dust Exposure**
  24 Hr exposure, pedals cycled
- **Chemical Exposure**
  Diesel fuel, brake fluid, antifreeze, and plastic protectant exposure.
- **Pressure Wash**
  250 psig detergent at +75°C - 40 minute exposure, 0.05 rpm
  1000 psig water at +75°C - 40 minute exposure, 0.05 rpm
- **Mechanical Shock**
  SAE J1455 One meter drop to concrete with additional harness drop test.

Regulatory Validation

- **FMVSS-124 RTI Certification**
  Per Federal regulations
- **FMVSS-302 Flammability**
  Per Federal regulations

Mechanical Validation

- Validated to $3X10^6$ full stroke cycles at 1Hz

Typical Output Characteristics

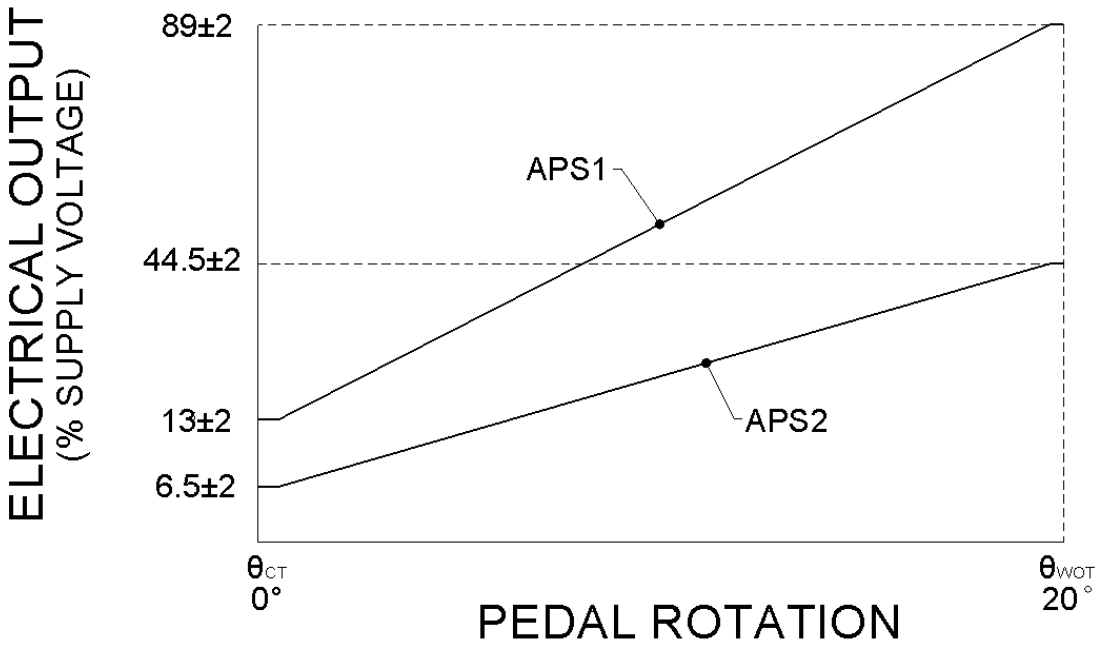

WCS-135189

Mechanical Dimensions and Characteristics
(For reference only, wire harness not shown in side view)

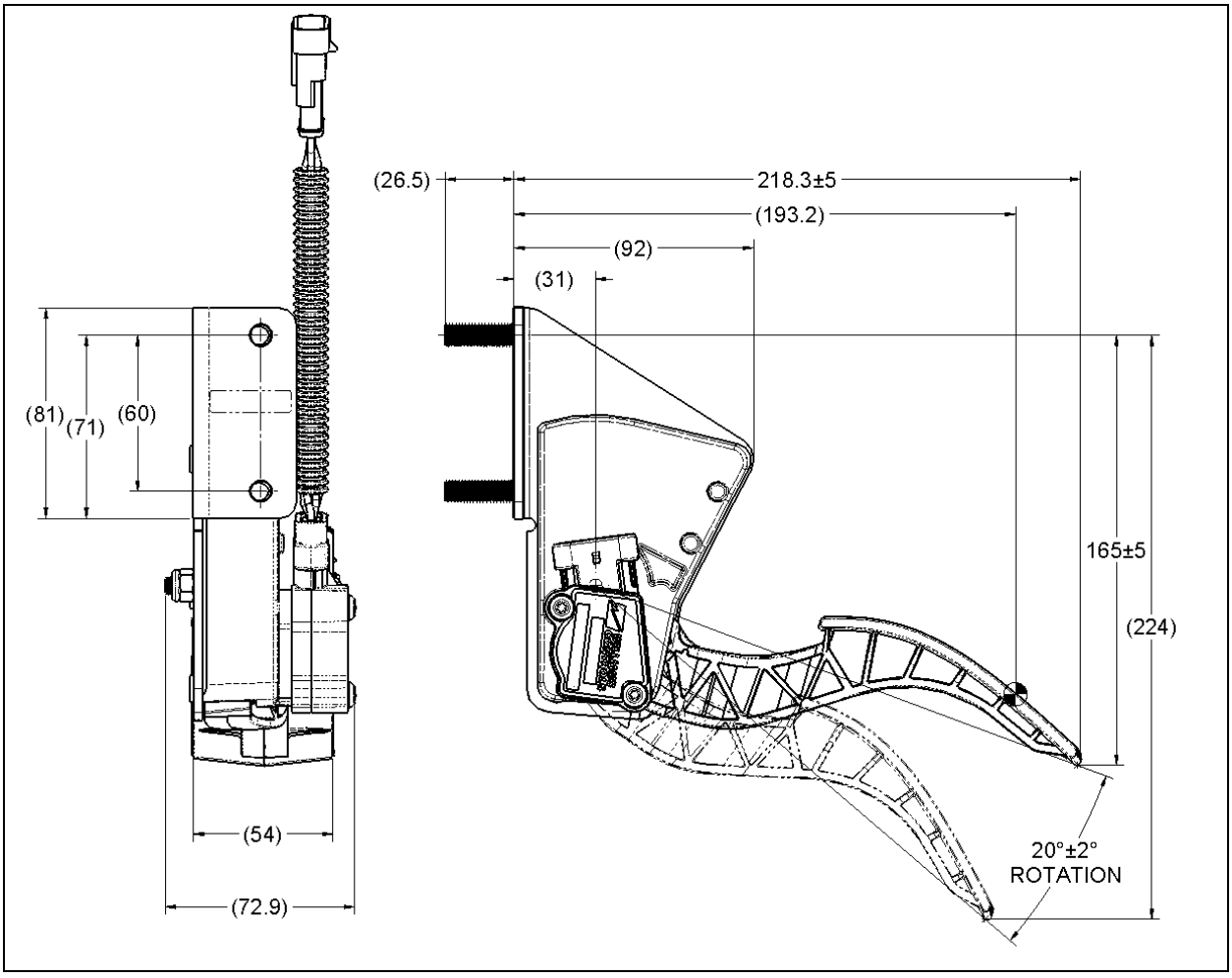

WILLIAMS CONTROLS	PROCEDURE NAME:	DEPT:	030		
	Williams Customer Specification Form				
DOCUMENT NUMBER:	WCS-135189	REVISION LEVEL: A	DATE EFFECTIVE: 11/13/07	DAF#:	00206

Applications Information:
The diagram below shows a suggested interconnection between the pedal sensor and a typical, compatible load circuit.

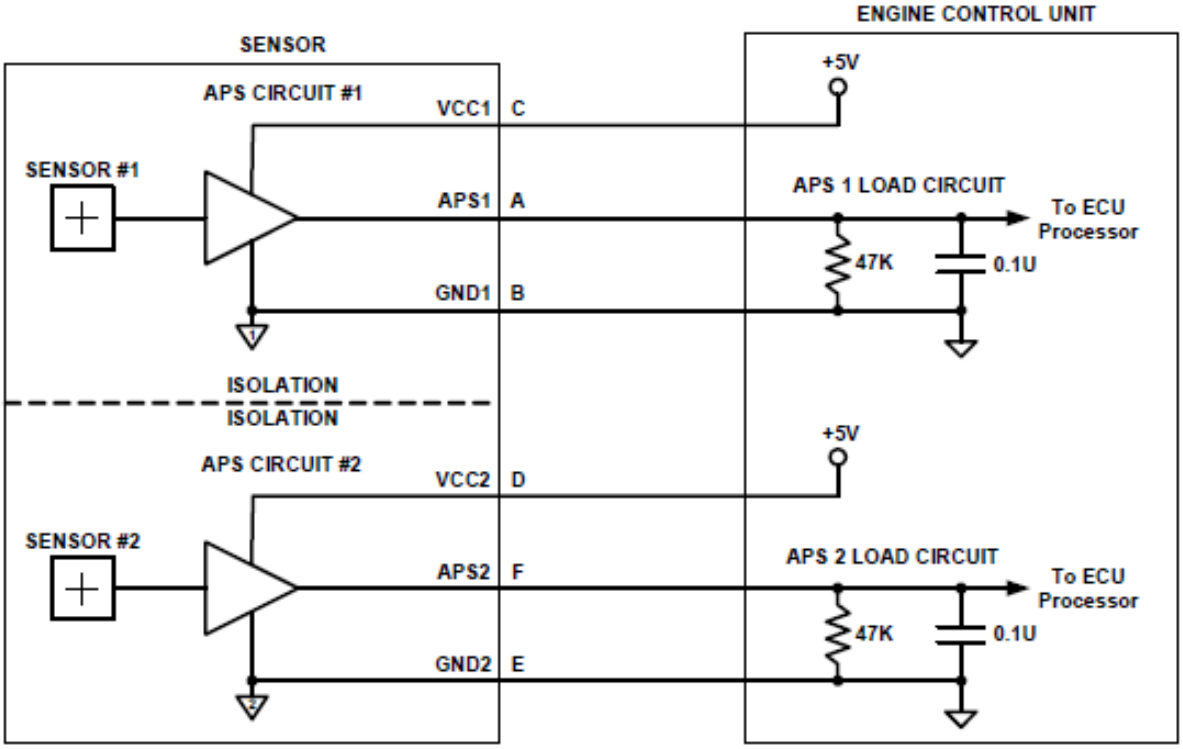

Revision History

Rev	Date	ECN#	Changes/Comments
A	06/02/2010	002326	Initial production release
002			
001			

Williams Controls
14100 S.W. 72nd Avenue
Portland, OR. 97224

Phone (503) 684-8600
Fax (503) 624-3812
Email info@wmco.com